

Presentation of Wind Logistics Group “SPEED BOAT”:

Wind Vessels of the Future

at

WIND LOGISTICS GROUP CONFERENCE, 2020.12.15

Transportens Innovationsnetværk
medfinanseres af Uddannelses- og Forskningsministeriet, Styrelsen for Forskning og Innovation

Transport Innovation Network (soon to become WWW.MARLOG.DK) and FORCE Technology

FORCE TECHNOLOGY

John Koch Nielsen, jnn@force.dk and Jacob Michelsen, jmi@force.dk

Brief intro on Jacob and John



Jacob Michelsen
M.Sc. Ph.D, Naval Architect - Senior Specialist
jmi@force.dk

25 years at FORCE Technology

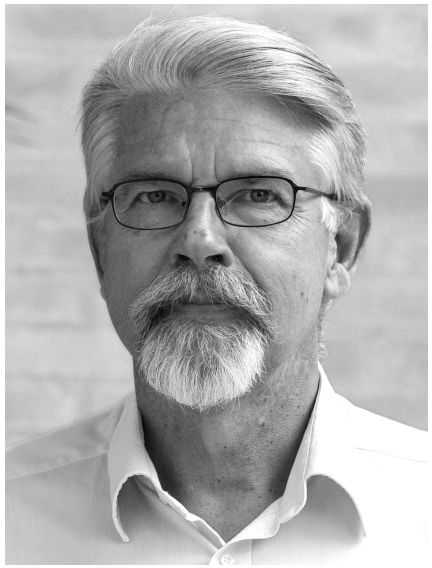

John Koch Nielsen
M.Sc., Control Engineering
R&D Coordinator
jnn@force.dk

40 years at FORCE Technology

A few words – and pictures - about FORCE Technology services in an offshore wind farm life cycle perspective:

	Development	Installation	Operation & Maintenance	Decom-missioning
Planning (focus on risks)	Risk analysis => Park layout	Traffic analysis => • Risks • Safety zones • Safeguards	Traffic analysis => • Risks • Safety zones • Safeguards	Risk analysis

Asset Design
 	
(focus on operability)
	Harbour design
	Logistics
	Waterways
	Anticollision safe guards
		Engineering simulations, towing tank / wind tunnels, CFD:
		
		Installation vessel
		• Manoeuvrability
		• Seakeeping and Weather windows
		• Mooring & tugs
		
		Lifting equipment
		• Tag line systems
		• Operability (weather windows)
		
		Floating wind
		• Tow out & ballasting
		• Anchoring
			Engineering simulations, towing tank / wind tunnels, CFD:
			
			Service vessel
			• Seakeeping
			• Motion sickness / comfort
			  • Transit condition
			  • Hotel condition
			• Weather windows
			
			Crew transfer equipment
			• Boat landings
			• Fender systems
			• Gangways
				Engineering simulations, towing tank / wind tunnels, CFD
				
				Crane vessels
				
				Lifting equipment

Operator Training (focus on safety and efficiency)		Ship handling Crew resource management Tug assistance DP & Jacking Lifting equipment VTS	Ship handling Crew resource management DP Crew transfer equipment • Push boat • Walk-to-work gangways	Ship handling
Inspection/ survey		Ultrasound scanning …	Fatigue, welding, corrosion Blade wear (drone inspection)	

Full mission simulator installation sold to jackup vessel operator



Simulation of a larger service vessel on DP subjected to a rough sea state

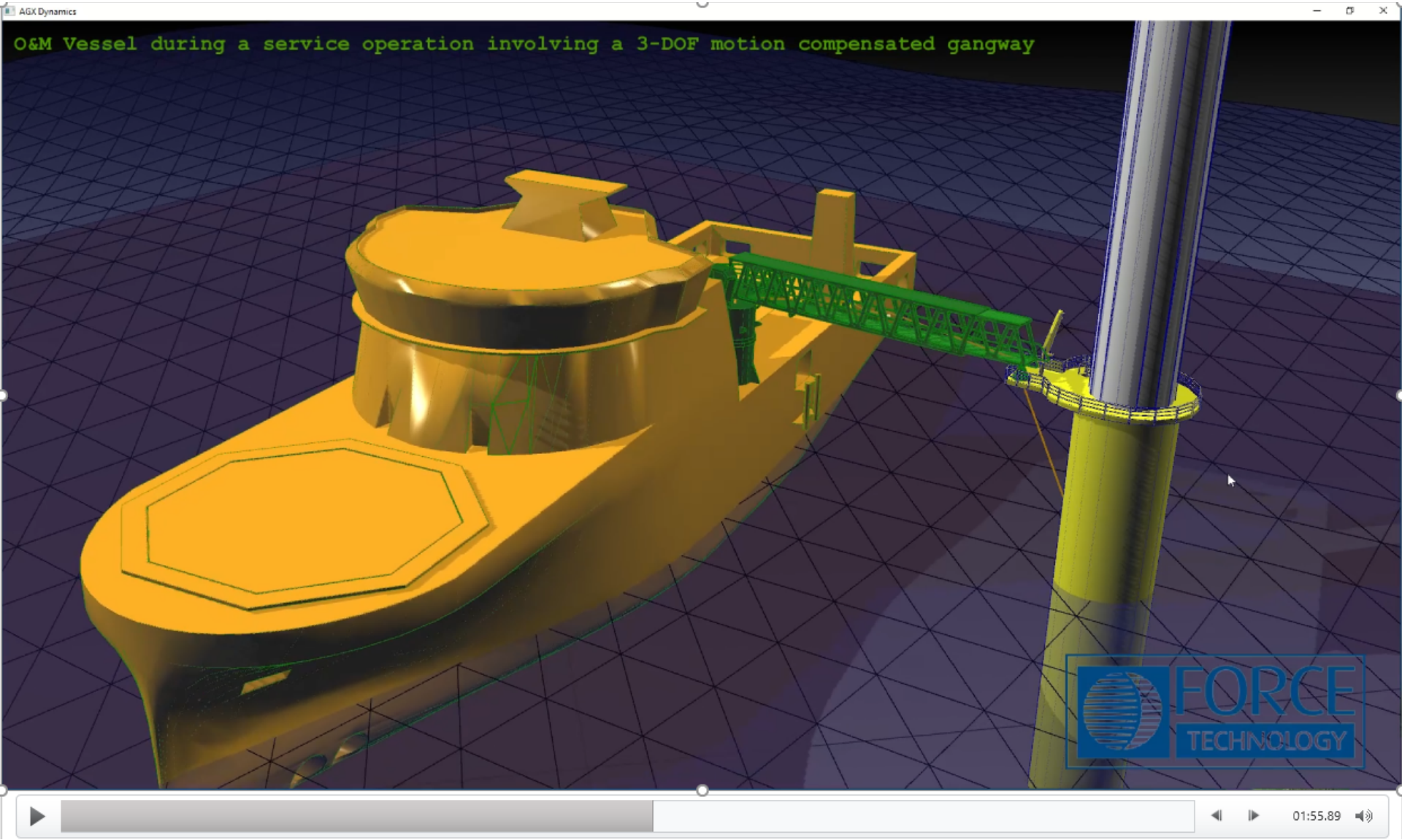

FORCE TECHNOLOGY


Simulation of W2W operations
• Vessel on DP in a seaway
• Vessel model interfaced to a kinematic model of the gangway
• Motion compensation software
• User interfaces and controls
• Visual theatre



Simulation of an installation vessel during a nacelle installation

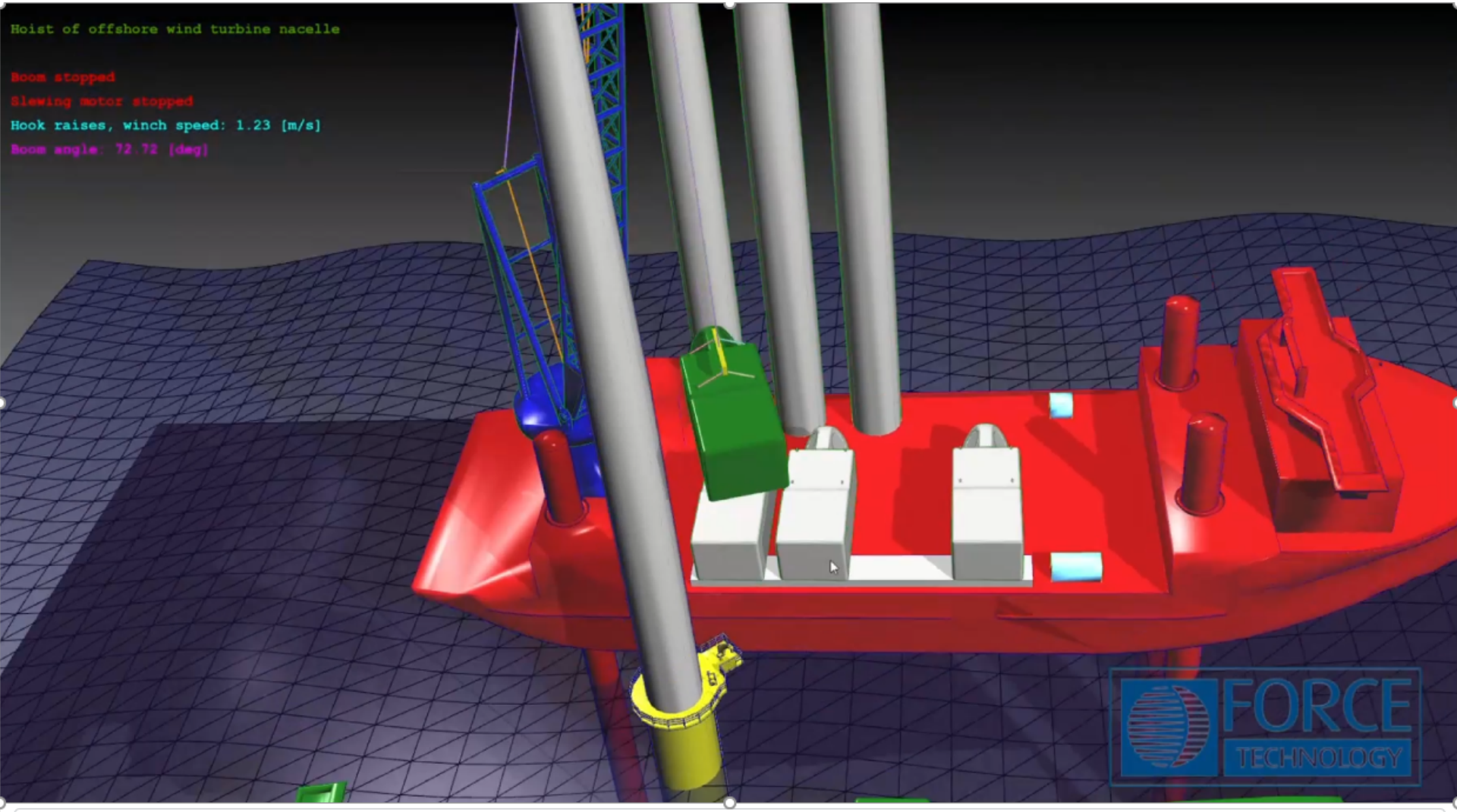

FORCE TECHNOLOGY

Simulation of blade installation subjected to fluctuating wind

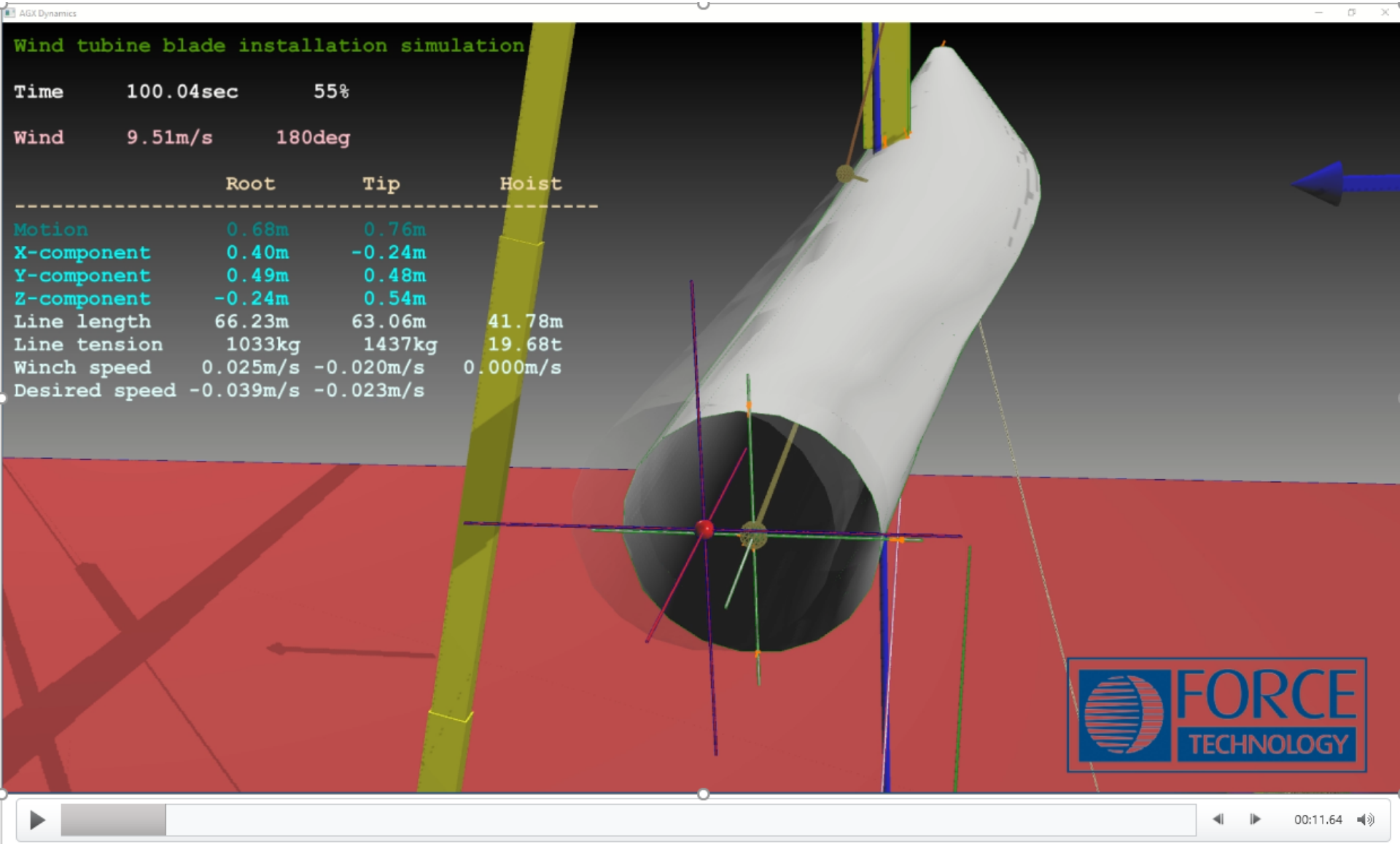

FORCE TECHNOLOGY

The work in the speed boat entitled ”Wind vessels of the future”

Wind Logistics Group

Transportens Innovationsnetværk
Medfinansieres af Uddannelses-og Forskningsministeriet

Two meetings per year

"The mother vessel"

Work gro

Work grou

Work grou

Work groups looking at specific ideas and topics

"Speed boats"

“Speed Boat”: **Wind vessels of the future**
Group members – so far ☺

Transportens Innovationsnetværk
Medfinansieres af Uddannelses-og Forskningsministeriet

• Peter Eriksen	Head Energy
• Per Fenger	LIFTRA
• Lars A. Sørensen	MHI Vestas Offshore
• Jacob Michelsen	FORCE Technology
Thomas Poulsen	Wind Logistics Group/Panticon (facilitator)

“Speed Boat”: **Wind vessels of the future**
- basic facts and objectives

Transportens Innovationsnetværk
Medfinansieres af Uddannelses-og Forskningsministeriet

- Growing wind turbine sizes / weights
- Demand and supply of vessels now and in the future
- Encouraging standard ways of operating and managing
- Bridging gap between vessel owners and OEMs
- Ensure future proofing of new capacity

Speed boat findings

This speed boat looked at 5 different opportunities for cross-value chain collaboration:

- The OEMs do things differently (e.g. RO/RO vs LO/LO operations, stacking of blades or not) and several areas of value creation can potentially be unlocked if ways of working are standardized:
  - Transport vessel design/construction (incl. heavy-lift capabilities)
  - Feeder-barge installation solutions to “fixed” installation vessel offshore
  - Installation vessel design/construction (jacked or floating)
  - Commonly shared transport equipment across OEMs (with interfaces)

- The market for floating offshore wind is yet to mature; high risk/high reward potential for early movers in “bleeding edge” market

Transport vessels (incl. heavy-lift capabilities)

- Existing fleet is somewhat aged
- Relatively few vessels exist with lifting capacity of 1,400 T (~20)

Decision to place a newbuilding order is based on:

- Calculation of future demand (shortsea, long-haul)
  - ✓ Manufacturing footprint, hubs, and ports
- Weight/dimensions of future components
- Understanding of transport/lifting/handling equipment
- Assumptions on heavy lifting capabilities (vessel or shore-based)
- Depreciation usually 20-25 years

Newbuilding business case/decision process usually 1-3 years:

- Design process of a vessel is then approx. 6 months
- Lead time from shipyard is 18-24 months

Transportens Innovationsnetværk
Medfinansieres af Uddannelses-og Forskningsministeriet

Several obstacles and limitations were identified:

- Not enough factual information and data is available
- The OEMs do not have the same ways of working
- Incentive from OEMs to drive change and standardize in order to unleash the potential value creation opportunities identified

Next steps

- We would like for some of our ideas can be formalized and made into projects to be worked on
  - ➢This requires an altered composition of the speed boat going forward
- Further input and potential collaboration will be sought from other efforts rendered where overlap may exist (WindEurope, MegaVind, GWEC)
- Some of the topics identified justifies further work in the Wind Logistics Group cross-value chain membership team
  - ➢We have different skills within the Wind Logistics Group team member composition
  - ➢An extended team with additional skills will now take this forward
  - ➢Commitment to streamline and standardize is necessary on the part of the OEMs

Learnings and recommendations

- Active involvement of especially the wind turbine OEMs is important to drive forward the work in this speed boat
- The key motivational factor is a joint goal to unlock the potential for cost savings identified by the work of this speed boat
- The members of this speed boat will be expanded to also include ship owners, naval architects, and OEMs
- The speed boat will continue its' work during the 1st quarter of 2021
- To continue the work in this sub-speed boat, no investments are needed at this time except voluntary input from the key stake-holders
  - ➢Going forward as the work progresses, it may be required to apply for funding in a separate project or formalized work process

Thank you!



John Koch Nielsen– jnn@force.dk