



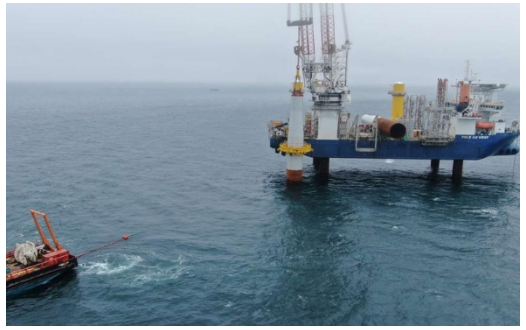



Transportens Innovationsnetværk

Medfinansieret af Uddannelses- og Forskningsministeriet

“Transport concept for big wind turbines” speed boat:

Transport/handling/lifting equipment

Participants:

NorSea | DIS | LM WIND POWER a GE Renewable Energy business | energy CLUSTER DENMARK

Photo sources: renewablesnow.com
windpowerengineering.com
transmissionhub.com
dominionenergy.com

Wind Logistics Group speed boat presentation

Transportens Innovationsnetværk
Medfinansieres af Uddannelses-og Forskningsministeriet

Jakob Schmidt



DIS innovative engineering

- Senior Engineer
- Speed boat participant

Thomas Poulsen



- Facilitator of Wind Logistics Group
- Speed boat facilitator
- Managing Partner Panticon RELIABLE·EFFECTIVE·SUSTAINABLE

Company profile – DIS/CREADIS

DIS innovative engineering

CREADIS innovative engineering

Founded i 1997

+500 employees

Departments in Denmark, Poland, Spain, Germany and USA – 17 offices in total

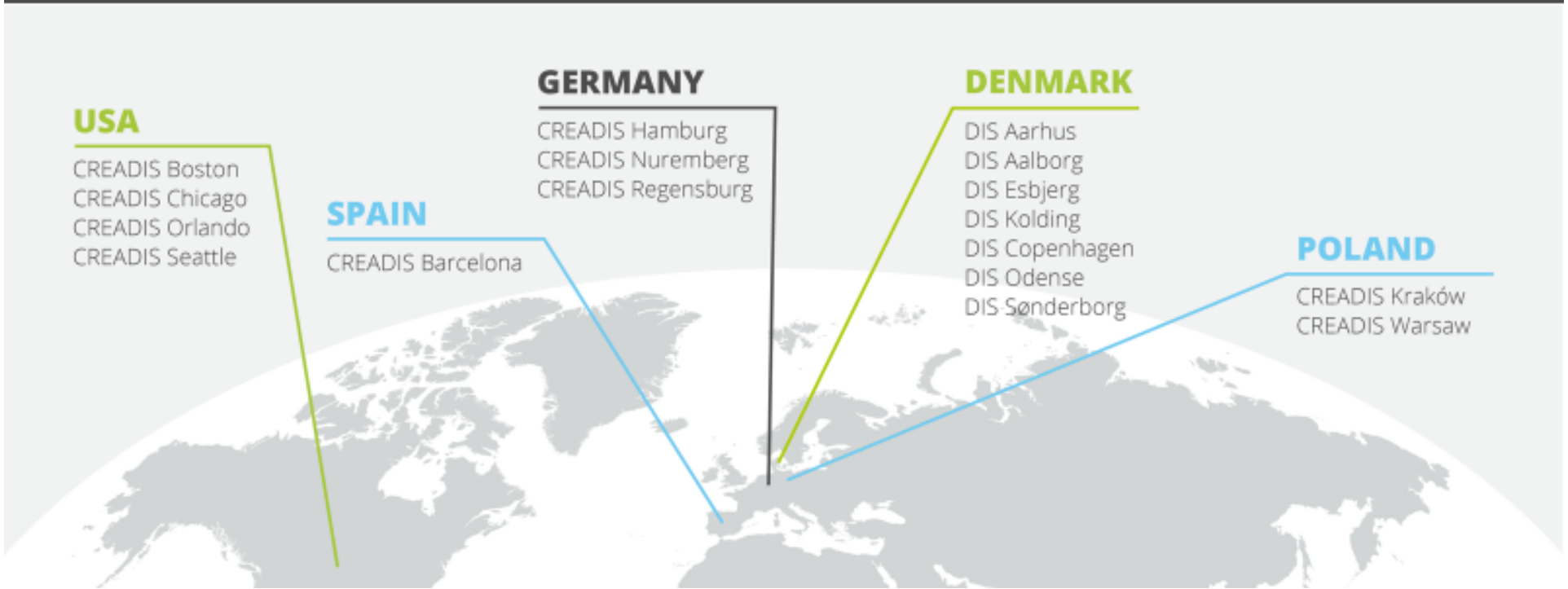

Speed boat:
- Transport concept for big wind turbines

Transportens Innovationsnetværk
Medfinansieres af Uddannelses-og Forskningsministeriet

September 22, 2020 online call:
- decision to split in 3 sub-speed boats

Specifications for existing and future wind ports

Transport, lifting, and handling equipment

Wind vessels of the future

Speed boat:
- Transport concept for big wind turbines

Transportens Innovationsnetværk
Medfinansieres af Uddannelses-og Forskningsministeriet

September 22, 2020 online call:
- decision to split in 3 sub-speed boats

Specifications for existing and future wind ports

Transport, lifting, and handling equipment

Wind vessels of the future

Our findings

Transportens Innovationsnetværk
Medfinansieres af Uddannelses-og Forskningsministeriet

We looked at 5 different topics which can be organized as follows:

1. We envisaged a story-board with a decision tree displaying how logistical choices are inter-connected, i.e. the choice of vessels (RO/RO vs. LO/LO) and downstream implications e.g. on whether to lift or use SPMTs or similar
2. We looked at the possible use of the same transport frames for several wind turbine manufacturers:
   a) Nacelle and hub frames that can be used from point of manufacture through ports and on board vessels
   b) An adapter flange for blades to enable connectivity between blade and transport frame
3. A specific innovation made by a specific company: Could we help them make it an industry standard?
4. **The next generation offshore wind blades are long, heavy, and hard to move/lift. Could we design a new hybrid piece of handling equipment?**

Issue under evaluation

Handling of next gen offshore blades with current means is costly and time consuming

Focus areas:

- Short distance transport (v<10kmh) and harbor/factory operations

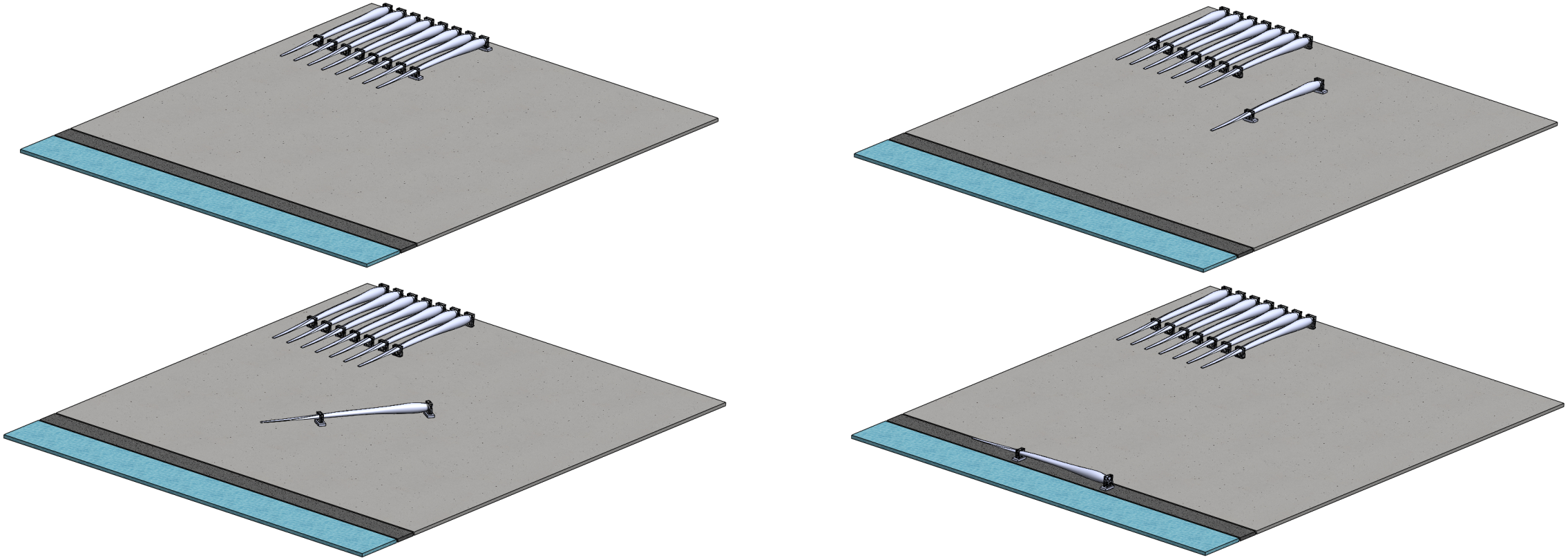

Visualization of concept 1/2

Original idea: Create a hybrid between a reach stacker and SPMT

- Lifting from the bottom

CONCEPT:
BLADE HARBOUR WAGON

SMPT CONCEPT

Functionalities:

Speed:	5-10km/h
Capacity:	40-50MT each
Powertrain:	Electrical/hydraulic
Powers source:	Battery pack
Weight:	XX
Development cost:	XX
Unit cost:	XX

CREADIS

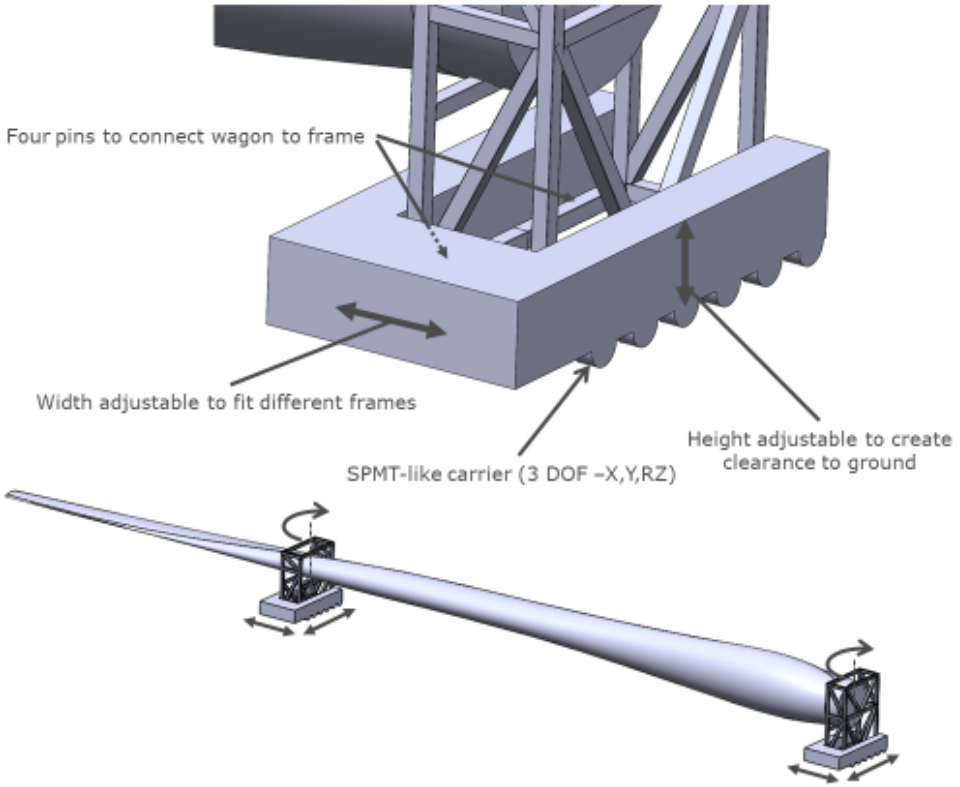

Visualization of concept 1/2

Original idea: Create a hybrid between a reach stacker and SPMT

- Lifting from the top

CONCEPT:
BLADE HARBOUR WAGON

REACH STACKER CONCEPT

Functionalities:

Speed:	5-10km/h
Capacity:	40-50MT each
Powertrain:	Electrical/hydraulic
Powers source:	Battery pack
Weight:	XX
Development cost:	XX
Unit cost:	XX

CREADIS

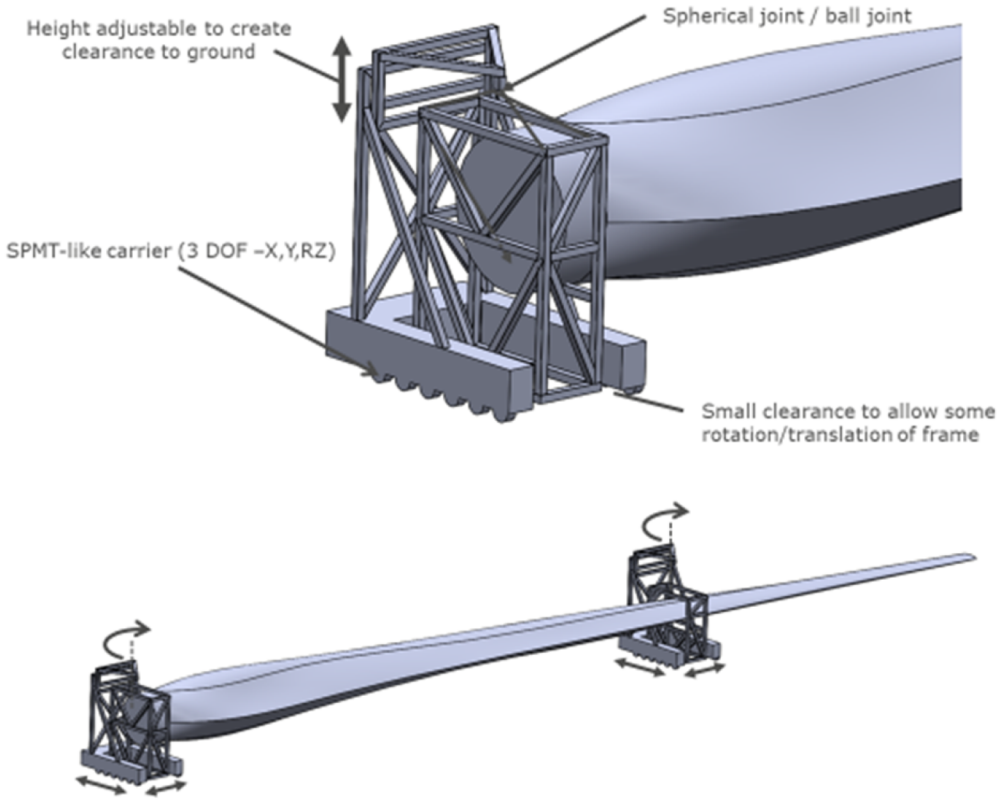

Future work

- Understand if this is a need of one turbine manufacturer or more
  - Dialogue with wind turbine manufactures, service companies and operators
- Formalize project including develop budget and work plan
- Discuss with local manufacturer with track-record
- Next steps will be done during December 2020 – March 2021