DTU Wind Energy

Technical University of Denmark
Department for Wind Energy

Ignacio Marti, Head of Division Wind Energy
Materials and Components

Digital Energy & Transport Summit IV
December 15th 2020

Ignacio Marti profile

Head of Division for Wind Energy Materials and Components at DTU Wind Energy

Executive Secretary of IEA Wind Technology Collaboration Program

Previous positions:

- Innovation and Research Director, ORE Catapult (UK)
- Chief Technology Officer NaREC (UK)
- Deputy Technical Director CENER (Spain)



https://ieawind.connectedcommunity.org/



Denmark

A Wind Energy Nation

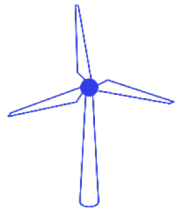

4000 onshore and **500** offshore turbines



47% of annual electricity production



33.000

People directly employed in wind energy



€20 bn.

Annual industry turnover



€7.4 bn.

Annual Export



DTU Wind Energy in Numbers

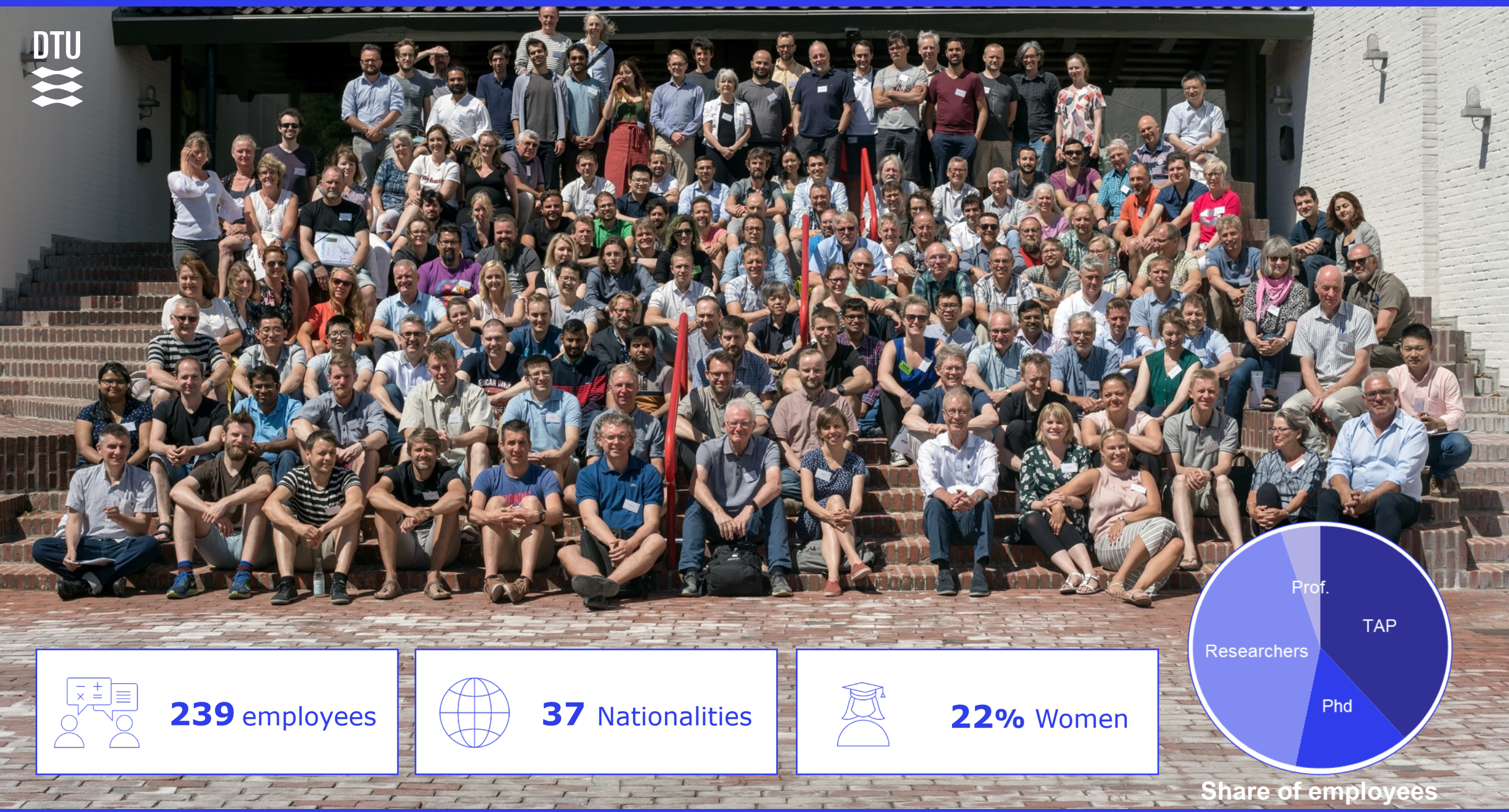

239 employees

37 Nationalities

22% Women

Share of employees

Test facilities



DTU Wind Energy research activities and industry activities

DTU Wind energy

- Resource Assessment Modelling
- Meteorology and Remote Sensing
- Grid Integration and Planning
- Loads and Control
- Fluid Mechanics
- Aerodynamic Design
- Structures and Component Design
- Test and Measurements
- Composites & Materials Mechanics

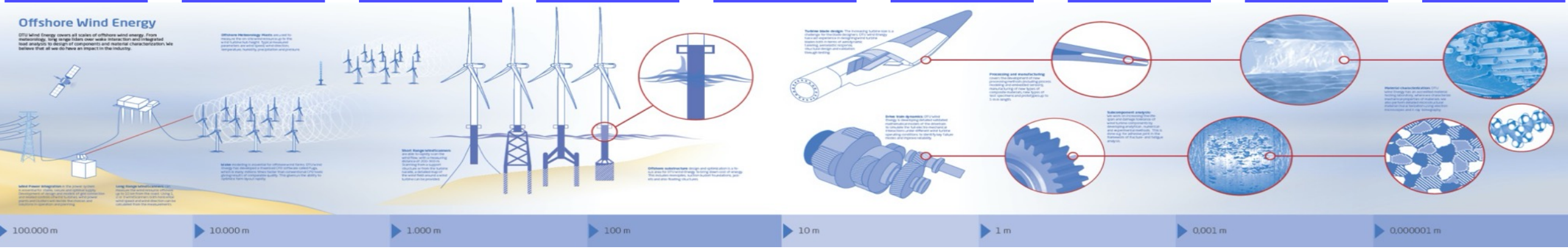

Wind Energy Materials & Components

Wind Turbine Design

Wind Energy Systems

Education and Training

Research based consultancy and tests

Panel session 1: Seven years of shipping and logistics collaboration

10:00-10:50 Panel session 1: **Seven years of shipping and logistics collaboration**
Moderator: Ignacio Marti, DTU Wind Energy
Panelists:

- **Utilization of handling/lifting/transport equipment** by Jakob S. Schmidt, DIS/CREADIS
- **Future proofing ports: How big are the wind turbines going to be?** by Nicolai Noerager Andersen, DHL
- **New sheriff in town - USA wind energy infrastructure** by Thomas Poulsen, Panticon

Speaker #1: Jakob Schmidt
Utilization of handling/lifting/transport equipment
“Transport concept for big wind turbines” speed boat



Employment and focus: Senior Engineer, DIS/CREADIS

Development of solutions for the wind industry

with main focus on structural design and verification

Educational background: B.Sc in Mechanal Engineering, Engineering College of Aarhus

Presentation today: Status of work performed in one of the Wind Logistics Group speed boats

- tasked by Wind Logistics Group to look at equipment

Speaker #2 – Nicolai N. Andersen
“Future proofing ports: How big are the wind turbines going to be?”

Employment

- Global Sector Head, Renewable Energy, DHL Industrial projects
  - Primary focus within on-/off-shore wind & Solar

Past employment

- GEODIS, deugro, ALPI

Background

- Freight forwarder by nature
- +10 years in Projects logistics for the Wind Industry in Denmark, South Africa, Indonesia & Australia

Presentation today

- Status update on speed boat:

Specifications for existing and future wind ports



Speaker #3: Thomas Poulsen

”New sheriff in town: USA wind energy infrastructure”



Employment and focus: Managing Partner, Panticon
Facilitator, Wind Logistics Group
Non-executive member of Boards of Directors

Past employers: A.P. Møller-Mærsk, Toys”R”Us, APL Logistics/NOL, DelCon/ABF

Educational background: PhD (2018)
- PhD exchange DTU Wind Energy, Risø (2015-2018)
MBA (2011)
Board of Directors’ governance (2019)



Presentation today: Status of work performed in one of the Wind Logistics Group speed boats
- tasked by Wind Logistics Group to look at USA logistics infrastructure for wind energy industry